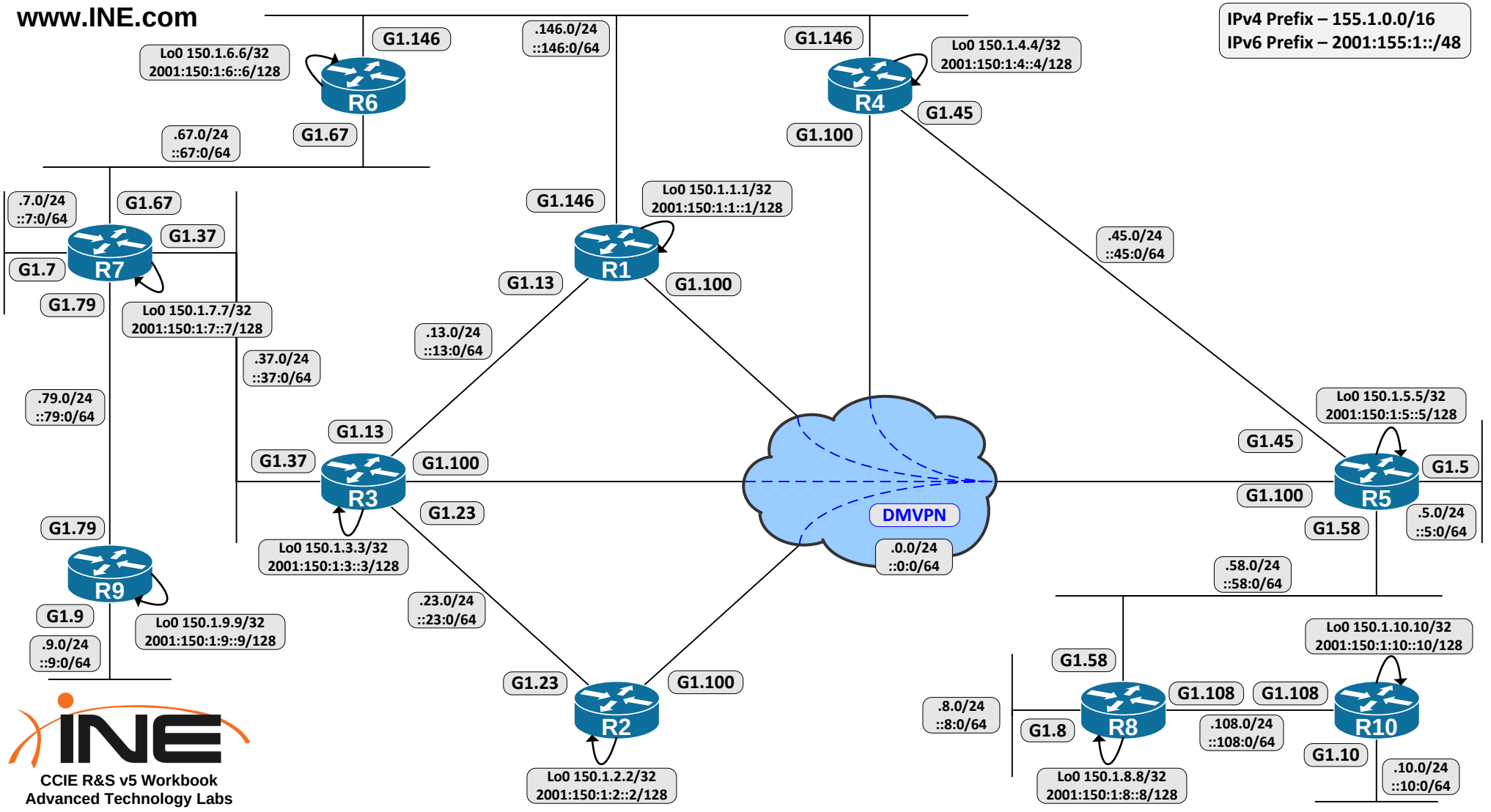
www.INE.com
IPv4 Prefix – 155.1.0.0/16
IPv6 Prefix – 2001:155:1::/48
R6
Lo0 150.1.6.6/32
2001:150:1:6::6/128
G1.146
.146.0/24
::146:0/64
G1.67
.67.0/24
::67:0/64
R4
Lo0 150.1.4.4/32
2001:150:1:4::4/128
G1.146
G1.45
G1.100
R7
.7.0/24
::7:0/64
G1.67
G1.37
G1.7
G1.79
Lo0 150.1.7.7/32
2001:150:1:7::7/128
.37.0/24
::37:0/64
R1
Lo0 150.1.1.1/32
2001:150:1:1::1/128
G1.146
G1.13
G1.100
.13.0/24
::13:0/64
.45.0/24
::45:0/64
.79.0/24
::79:0/64
R3
G1.13
G1.37
G1.100
G1.23
Lo0 150.1.3.3/32
2001:150:1:3::3/128
DMVPN
.0.0/24
::0:0/64
R5
Lo0 150.1.5.5/32
2001:150:1:5::5/128
G1.45
G1.5
G1.100
G1.58
.5.0/24
::5:0/64
.58.0/24
::58:0/64
R9
G1.79
G1.9
.9.0/24
::9:0/64
Lo0 150.1.9.9/32
2001:150:1:9::9/128
.23.0/24
::23:0/64
R2
G1.23
G1.100
Lo0 150.1.2.2/32
2001:150:1:2::2/128
R8
G1.58
.8.0/24
::8:0/64
G1.8
G1.108
.108.0/24
::108:0/64
Lo0 150.1.8.8/32
2001:150:1:8::8/128
R10
Lo0 150.1.10.10/32
2001:150:1:10::10/128
G1.108
G1.10
.10.0/24
::10:0/64
INE
CCIE R&S v5 Workbook
Advanced Technology Labs

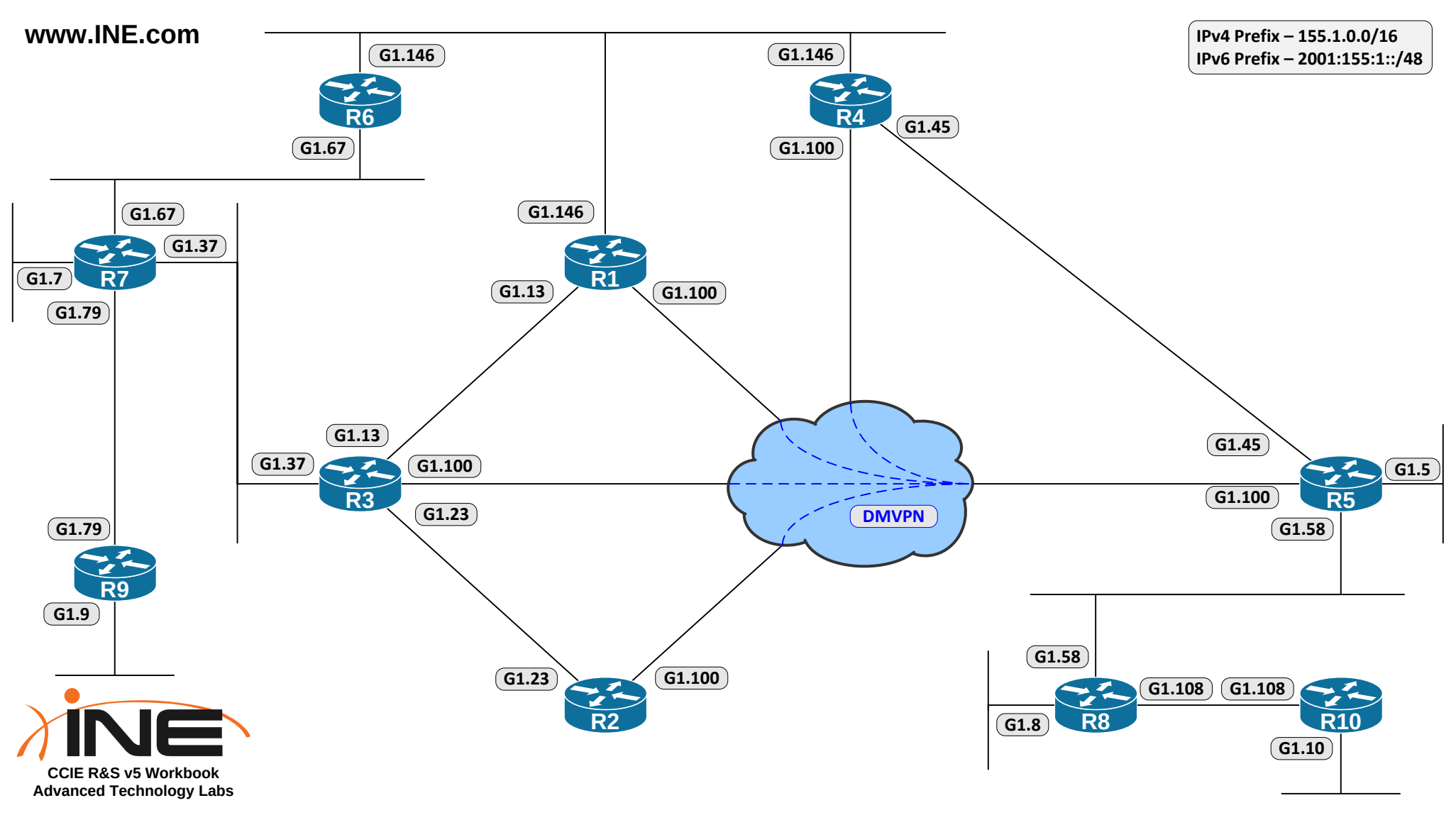
www.INE.com
IPv4 Prefix – 155.1.0.0/16
IPv6 Prefix – 2001:155:1::/48
R6
G1.146
G1.67
R4
G1.146
G1.45
G1.100
R7
G1.67
G1.37
G1.7
G1.79
R1
G1.146
G1.13
G1.100
R3
G1.13
G1.37
G1.100
G1.23
DMVPN
R5
G1.45
G1.5
G1.100
G1.58
R9
G1.79
G1.9
R2
G1.23
G1.100
R8
G1.58
G1.8
G1.108
R10
G1.108
G1.10
INE
CCIE R&S v5 Workbook
Advanced Technology Labs

IPv4 Prefix – 155.1.0.0/16
IPv6 Prefix – 2001:155:1::/48

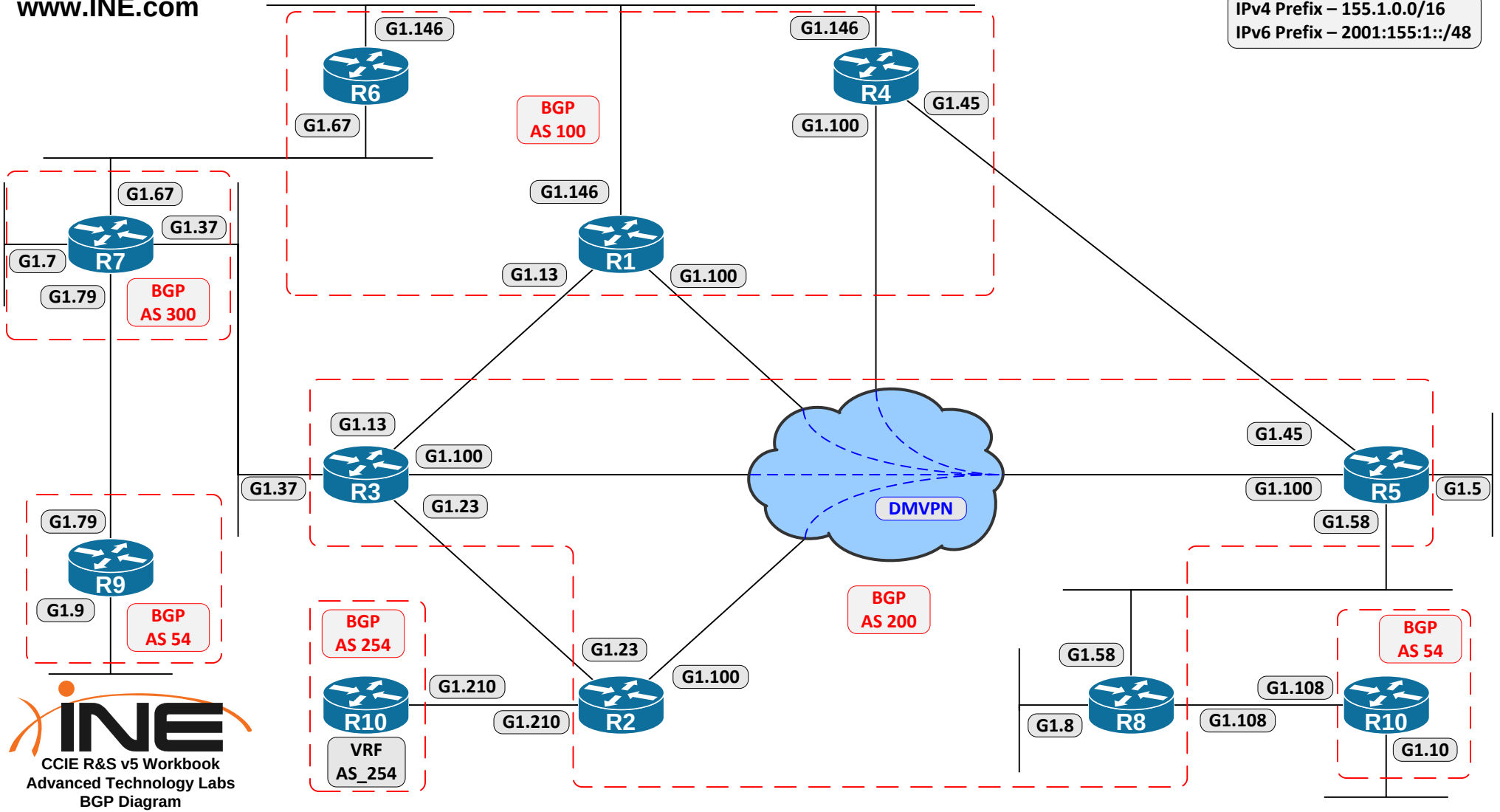

CCIE R&S v5 Workbook
Advanced Technology Labs
BGP Diagram

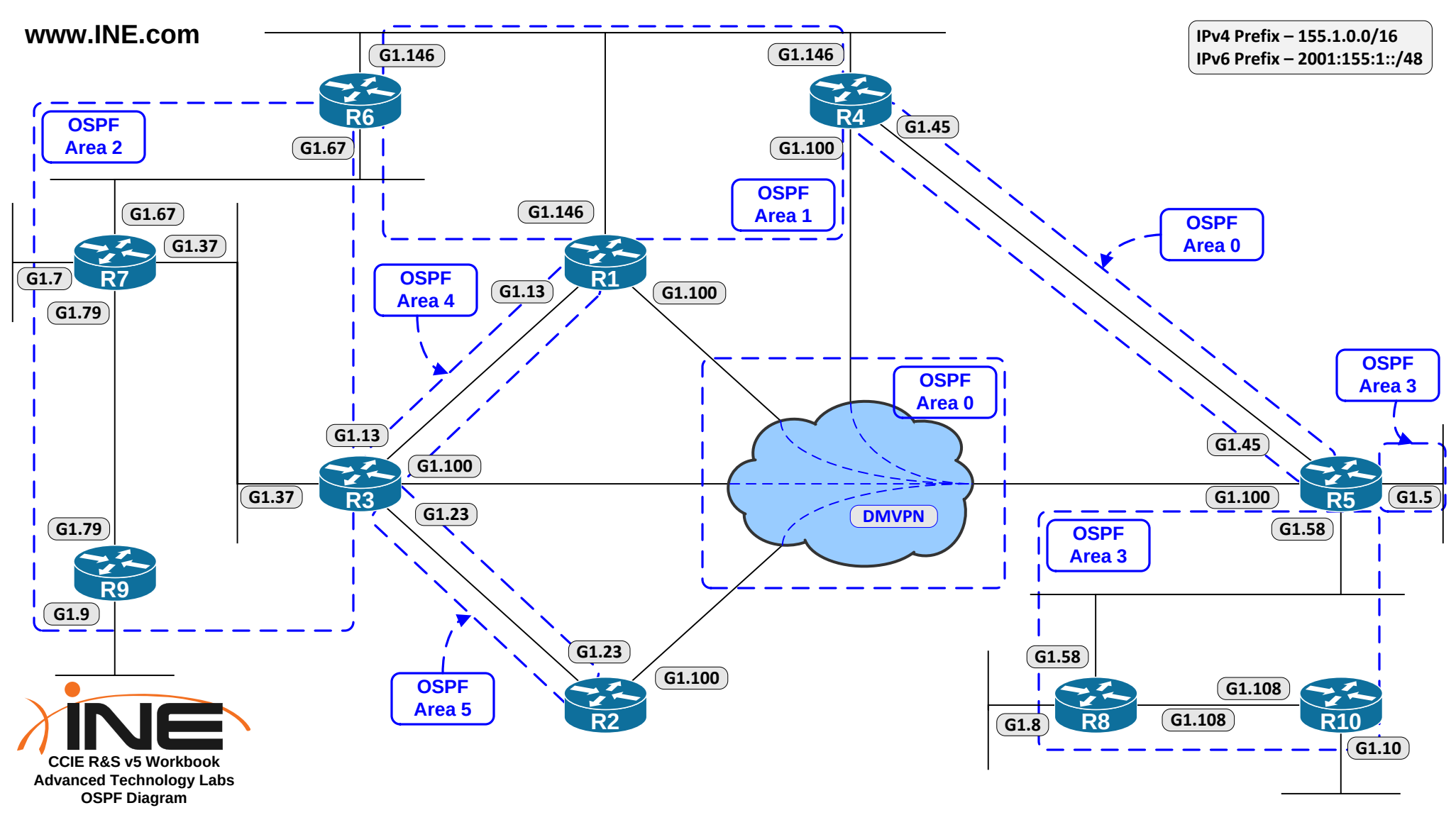
www.INE.com
IPv4 Prefix – 155.1.0.0/16
IPv6 Prefix – 2001:155:1::/48
OSPF Area 2
OSPF Area 1
OSPF Area 0
OSPF Area 4
OSPF Area 3
OSPF Area 5
DMVPN
R1
R2
R3
R4
R5
R6
R7
R8
R9
R10
G1.146
G1.67
G1.37
G1.7
G1.79
G1.9
G1.13
G1.100
G1.23
G1.45
G1.5
G1.58
G1.8
G1.108
G1.10
CCIE R&S v5 Workbook
Advanced Technology Labs
OSPF Diagram

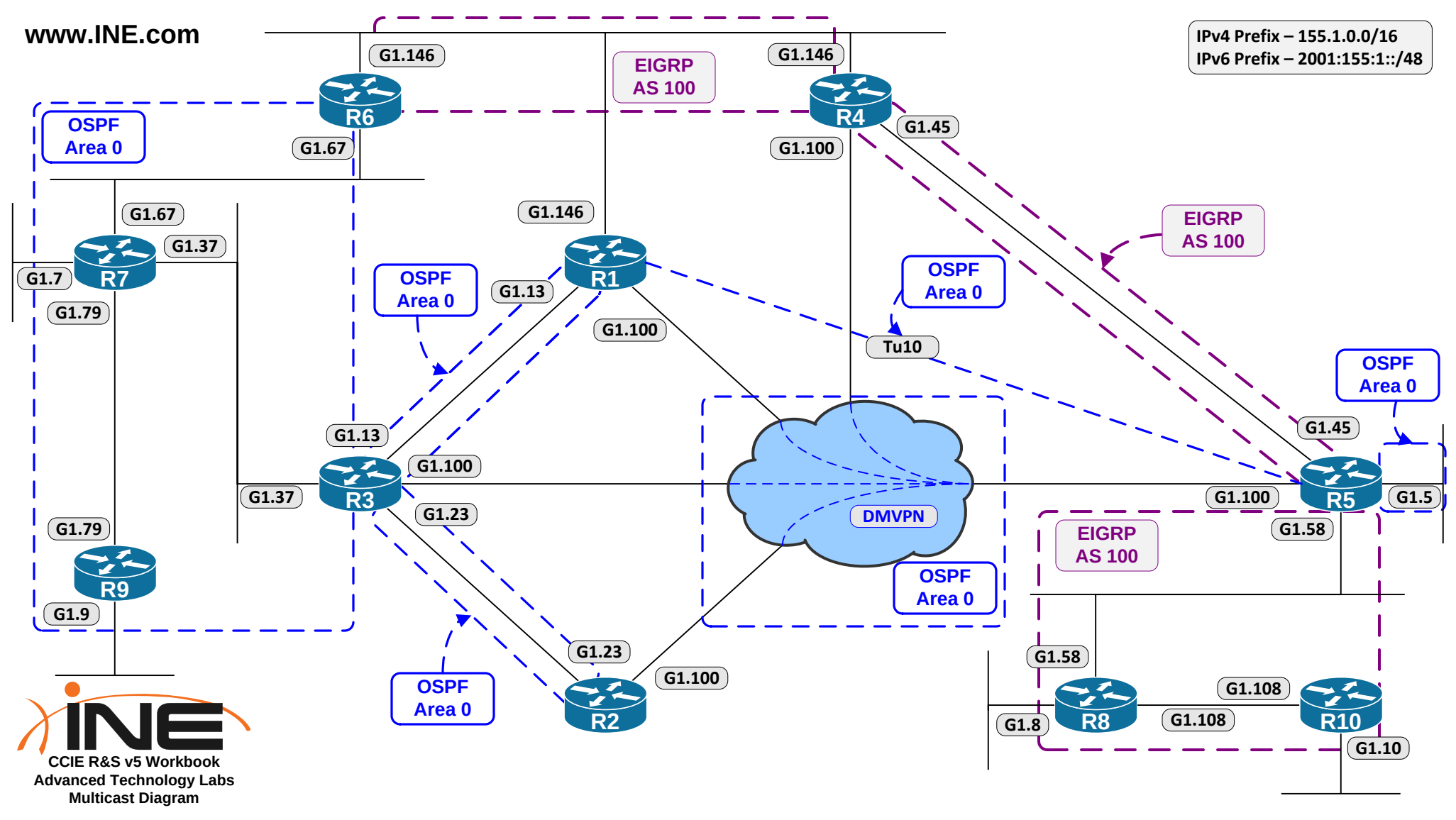
www.INE.com
IPv4 Prefix – 155.1.0.0/16
IPv6 Prefix – 2001:155:1::/48
EIGRP AS 100
OSPF Area 0
R6
R4
R7
R1
R3
R5
R9
R2
R8
R10
DMVPN
Tu10
G1.146
G1.67
G1.37
G1.7
G1.79
G1.13
G1.100
G1.45
G1.23
G1.9
G1.5
G1.58
G1.108
G1.8
G1.10
CCIE R&S v5 Workbook
Advanced Technology Labs
Multicast Diagram

IPv4 Prefix – 155.1.0.0/16
IPv6 Prefix – 2001:155:1::/48

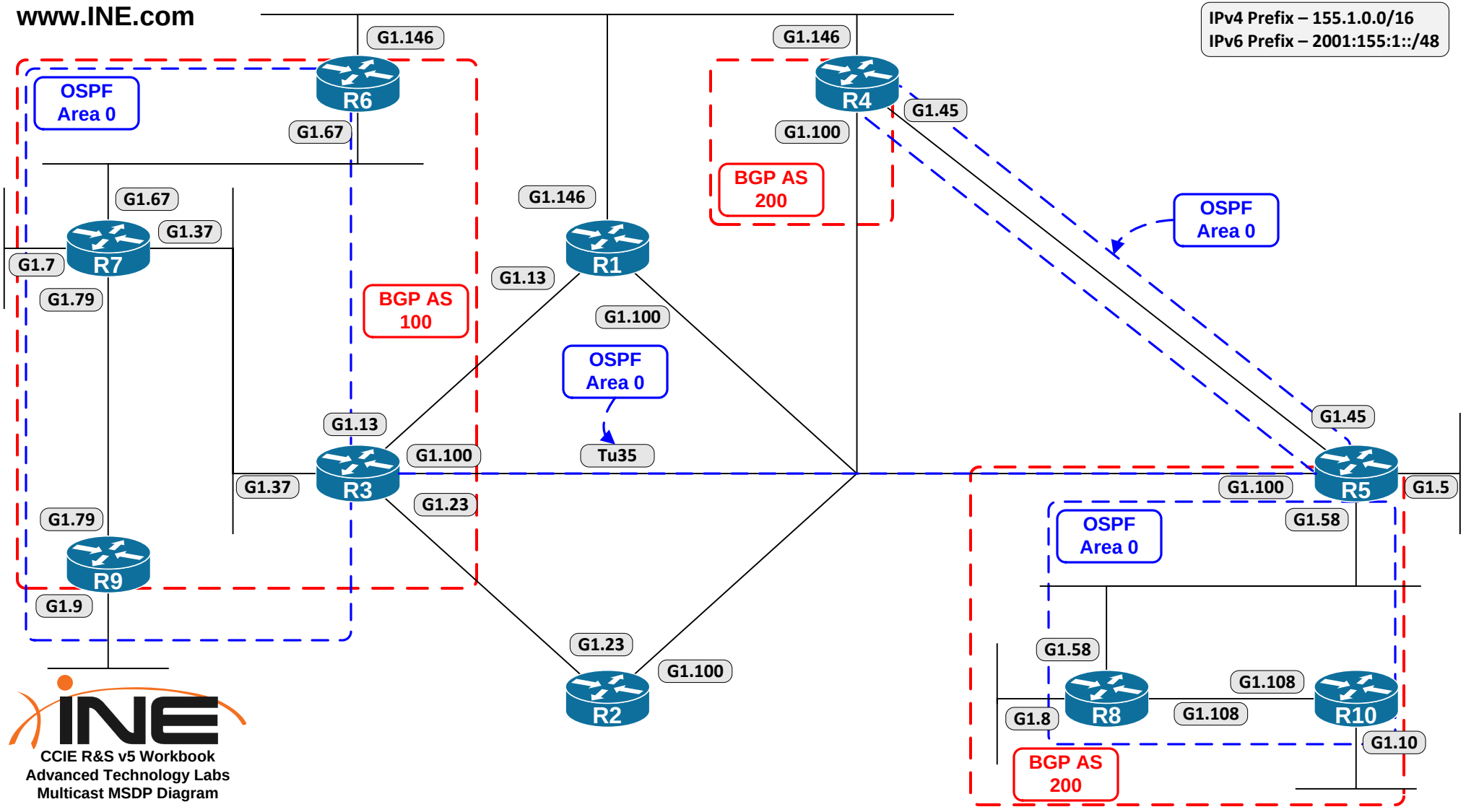

CCIE R&S v5 Workbook
Advanced Technology Labs
Multicast MSDP Diagram